用水创造价值

Create Value with Water Power

Guangdong Fussen Waterjet Technology Co., Ltd.

+86 133 1285 1122

lantian@fussen.com.cn

www.fussenpump.com

Building 3, No.9 Shunying Road, Shunde District, Foshan, China

FUSSEN®

HIGH PRESSURE PLUNGER PUMP

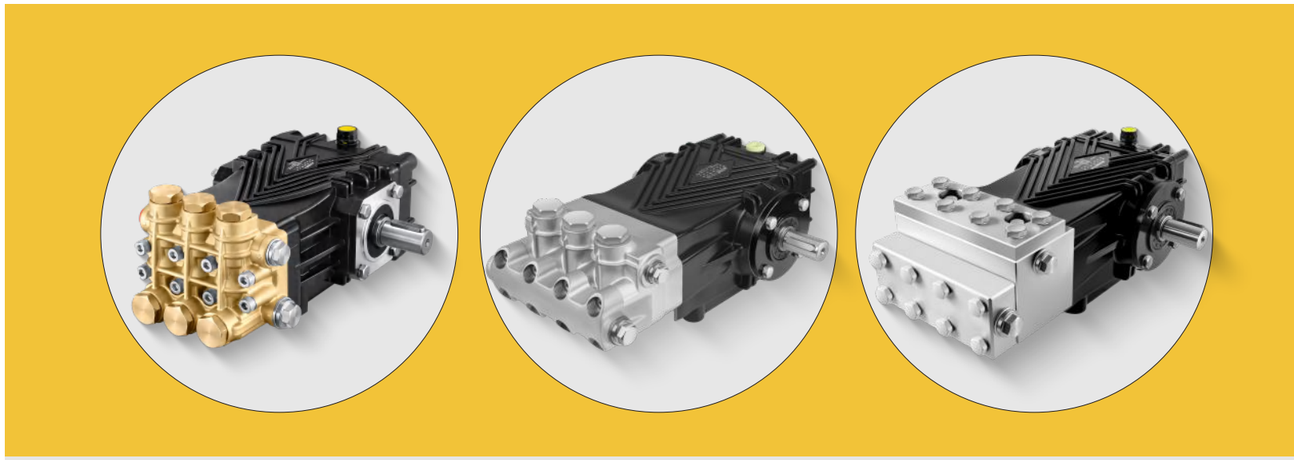

www.fussenpump.com

COMPANY PROFILE

About Us

Founded in 2001, Fussen has been consistently dedicated to the research, development, and innovation of high-pressure water jet technology, with more than 20 years of technical expertise in high-pressure plunger pumps.

Through advanced manufacturing processes and strict quality control, Fussen delivers pumps that are high quality, durable, and reliable. Our equipment is widely applied in ship cleaning, industrial paint and rust removal, petrochemicals, and building maintenance, and has gained broad recognition in both domestic and international markets.

Professional **International** **Brand-Oriented**

Professional

Professional High-Pressure Cleaning Technology

Fussen develops advanced high-pressure pump technology that ensures efficiency, durability, and stability across diverse industrial applications.

The high-pressure pump, as the core component of a high-pressure cleaner, directly determines the overall efficiency and stability of the system. With deep insights into industry requirements, Fussen has developed a comprehensive range of professional cleaning solutions designed to meet diverse needs across different pressure levels, flow rates, and working environments.

Fussen's high-pressure plunger pumps are engineered with strict material selection, high-precision machining, and advanced sealing technology to ensure reliability and performance.

Fussen pumps are equipped with ceramic and alloy steel plungers to ensure reliable performance and durability. The ceramic plungers offer excellent wear and corrosion resistance with a smooth, low-friction surface that extends seal life, while the alloy steel plungers provide exceptional strength and impact resistance for high-pressure applications. Together with high-quality water and oil seals, the system maintains stable operation and long service life. For particularly demanding environments, Fussen also provides customized corrosion-resistant and high-temperature-resistant seal solutions. As a result, the pumps deliver reliable stability, superior efficiency, and extended durability under diverse operating conditions.

International

International Quality Standards and Worldwide Reach

Fussen is committed to delivering products that meet the highest international standards and are shipped to customers worldwide.

The company operates in full compliance with the ISO9001 quality management system, ensuring excellence throughout design, production, testing, and service. All products are CE certified and comply with international safety requirements. With outstanding quality and consistent reliability, Fussen's pumps are widely used across Europe, the Middle East, Southeast Asia, and South America. Through long-term partnerships and a proven record of performance, the company has earned the trust of customers around the globe.

Brand-Oriented

Creating Value with Water

Fussen's brand philosophy is built on the belief that water is not only a resource but also a force for creating value.

The company is committed to delivering high-quality pumps while advancing intelligent, efficient, and eco-friendly cleaning technology. Through continuous investment in research, development, and product optimization, Fussen leads the high-pressure water jet industry forward. Looking to the future, the company will continue to innovate and provide global customers with more professional, reliable, and sustainable cleaning solutions.

25+
Years of Experience

200+
Patents

5000m²
Factory

HONORS

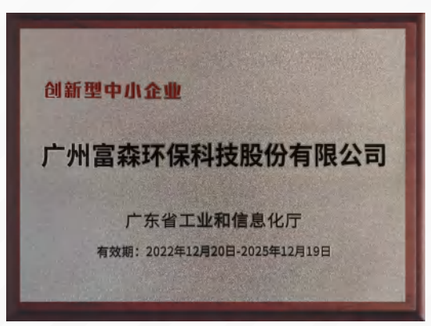

Certifications

Patents

Road Cleaning

Heavy Machinery Cleaning

Property Cleaning

Livestock Farm Cleaning

Car Washing

Rust Removal

Ship Cleaning

Railway Cleaning

Cross Section View of High Pressure Plunger Pump

- **High and low-pressure water seals**

  European imported water seal components are utilized, with both high and low-pressure seals being made of wear-resistant and temperature-resistant rubber-coated fabric material, capable of enduring long-term use and still performing excellently even in high-temperature environments of up to 65 degrees Celsius.

- **Crankcase**

  The crankcase is subjected to precision casting and oxidation treatment, with its surface coated in high-strength black electrophoretic paint. In addition, the top of the crankcase is equipped with efficient heat dissipation fins, which not only effectively dissipate heat but also enhance its structural strength.

- **Plunger connecting rod**

  Made of super alloy material, with exceptionally high load strength, it offers a longer lifespan, ensuring safe and stable operation.

- **Oil Cap**

  The oil cap has been relocated to the rear of the crankcase for ease of adding lubricating oil while also preventing oil splashes and potential leaks.

- **One Way Valve**

  The valve cage is made from high-temperature resistant engineering plastic that does not easily expand, while the valve seat and valve cover are constructed from 316 stainless steel material. Special materials with resilience are chosen for the spring component to ensure a long-lasting service life of the valve body.

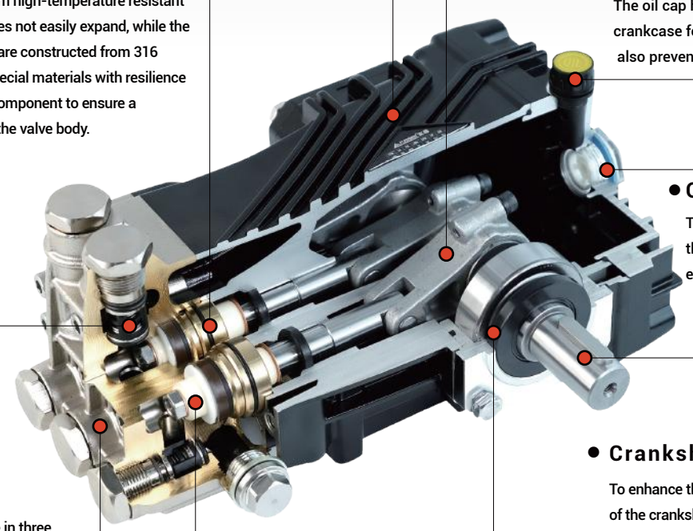

- **Oil level window**

  The oil level window located behind the pump makes checking the oil l evel more convenient.

- **Crankshaft**

  To enhance the strength, lifespan, and durability of the crankshaft, we have employed precision forging techniques along with hardening treatments in its manufacturing process.

- **Pump Head**

  The pump head is available in three different materials: brass, nickel-plated brass, and stainless steel. These materials exhibit excellent corrosion resistance. Additionally, the pump head channels are meticulously designed to ensure a high volumetric flow rate of water, reaching up to 99.8%.

- **Oil Seal**

  The oil seal is made from natural rubber material and is equipped with stainless steel springs to ensure sufficient tension force.

- **Ceramic plungers**

  Precision-machined robust ceramic plungers, suitable for high-load operations, exhibit outstanding wear resistance and strong corrosion resistance.

FUSSEN®

CONTENTS

A Series

	FAB	02
	FABH	03
	FAN	04
	FANH	05
	FAS	06
	FASH	07

B Series

	FBB	08
	FBN	09
	FBS	10

C Series

	FCB	11
	FCN	12
	FCH	13
	FCC	14
	FCK	15

C Series

	FCR	16
	FCM	17
	FCL	18

D Series

	FDH	19
	FDK	20
	FDL	21

E Series

	FEH	22
	FES	23
	FEK	24
	FEL	25
	FEK-G	26
	FES-G	27
	FFS-G	28
	FFS	29

FAB

Soild Shaft Ø24mm

TECHNICAL PARAMETERS

Model	Speed	Flow Rate		Pressure			Power		Weight	Inlet	Outlet
	RPM	L/min	GPM	Bar	Mpa	PSI	kW	HP	kg	Thread	Thread
FAB 1017	1450	10.0	2.6	170	17	2465	3.4	4.6	7.2	G 1/2	G 3/8
FAB 1312	1450	13.0	3.4	120	12	1740	3.1	4.2	7.2	G 1/2	G 3/8
FAB 1520	1450	15.0	4.0	200	20	2901	6.0	8.0	7.2	G 1/2	G 3/8
FAB 1525	1450	15.0	4.0	250	25	3625	7.5	10.1	7.2	G 1/2	G 3/8
FAB 1820	1450	18.0	4.8	200	20	2900	7.2	9.6	7.2	G 1/2	G 3/8
FAB 1217	1750	12.1	3.2	170	17	2465	4.1	5.5	7.2	G 1/2	G 3/8
FAB 1512	1750	15.7	4.1	120	12	1740	3.8	5.0	7.2	G 1/2	G 3/8
FAB 1825	1750	18.1	4.8	250	25	3625	9.1	12.1	7.2	G 1/2	G 3/8
FAB 2120	1750	21.7	5.7	200	20	2900	8.7	11.6	7.2	G 1/2	G 3/8

DIMENSION DIAGRAM (mm)

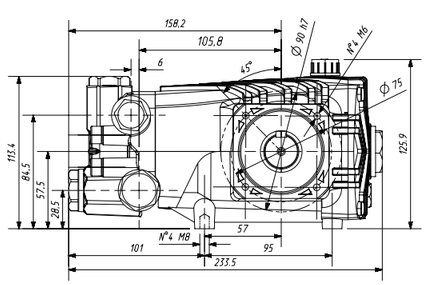

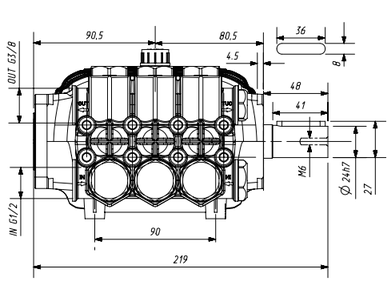

FABH

Hollow Shaft Ø28mm

TECHNICAL PARAMETERS

Model	Speed	Flow Rate		Pressure			Power		Weight	Inlet	Outlet
	RPM	L/min	GPM	Bar	Mpa	PSI	kW	HP	kg	Thread	Thread
FABH 1017	1450	10.0	2.6	170	17	2465	3.4	4.6	8.0	G 1/2	G 3/8
FABH 1312	1450	13.0	3.4	120	12	1740	3.1	4.2	8.0	G 1/2	G 3/8
FABH 1520	1450	15.0	4.0	200	20	2900	6.0	8.0	8.0	G 1/2	G 3/8
FABH 1525	1450	15.0	4.0	250	25	3625	7.5	10.1	8.0	G 1/2	G 3/8
FABH 1820	1450	18.0	4.8	200	20	2900	7.2	9.6	8.0	G 1/2	G 3/8
FABH 1217	1750	12.1	3.2	170	17	2465	4.1	5.5	8.0	G 1/2	G 3/8
FABH 1512	1750	15.7	4.1	120	12	1740	3.8	5.0	8.0	G 1/2	G 3/8
FABH 1825	1750	18.1	4.8	250	25	3625	9.1	12.1	7.2	G 1/2	G 3/8
FABH 2120	1750	21.7	5.7	200	20	2900	8.7	11.6	7.2	G 1/2	G 3/8

DIMENSION DIAGRAM (mm)

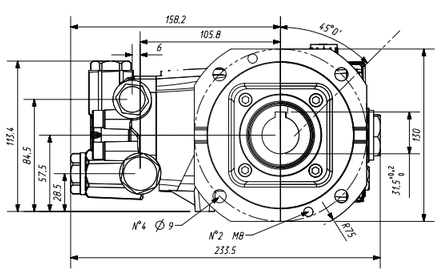

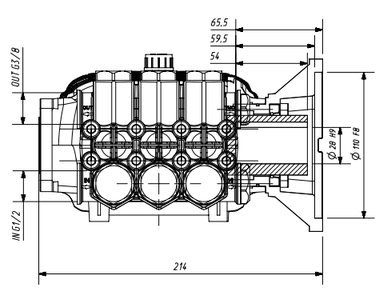

FAN

Soild Shaft Ø24mm

TECHNICAL PARAMETERS

Model	Speed	Flow Rate		Pressure			Power		Weight	Inlet	Outlet
	RPM	L/min	GPM	Bar	Mpa	PSI	KW	HP	kg	Thread	Thread
FAN 1017	1450	10.0	2.6	170	17	2465	3.4	4.6	7.2	G 1/2	G 3/8
FAN 1312	1450	13.0	3.4	120	12	1740	3.1	4.2	7.2	G 1/2	G 3/8
FAN 1520	1450	15.0	4.0	200	20	2900	6.0	8.0	7.2	G 1/2	G 3/8
FAN 1525	1450	15.0	4.0	250	25	3625	7.5	10.1	7.2	G 1/2	G 3/8
FAN 1820	1450	18.0	4.8	200	20	2900	7.2	9.6	7.2	G 1/2	G 3/8
FAN 1217	1750	12.1	3.2	170	17	2465	4.1	5.5	7.2	G 1/2	G 3/8
FAN 1512	1750	15.7	4.1	120	12	1740	3.8	5.0	7.2	G 1/2	G 3/8
FAN 1825	1750	18.1	4.8	250	25	3625	9.1	12.1	7.2	G 1/2	G 3/8
FAN 2120	1750	21.7	5.7	200	20	2900	8.7	11.6	7.2	G 1/2	G 3/8

DIMENSION DIAGRAM (mm)

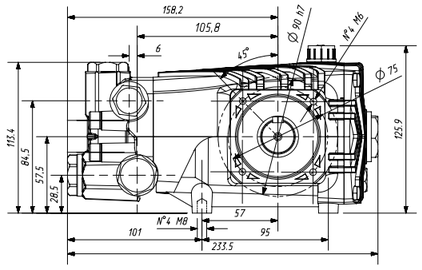

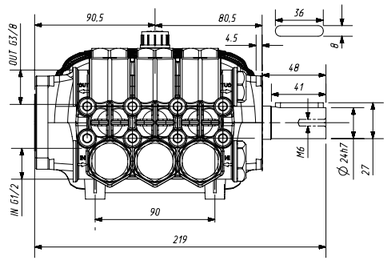

FANH

Hollow Shaft Ø28mm

TECHNICAL PARAMETERS

Model	Speed	Flow Rate		Pressure			Power		Weight	Inlet	Outlet
	RPM	L/min	GPM	Bar	Mpa	PSI	kW	HP	kg	Thread	Thread
FANH 1017	1450	10.0	2.6	170	17	2465	3.4	4.6	8.0	G 1/2	G 3/8
FANH 1312	1450	13.0	3.4	120	12	1740	3.1	4.2	8.0	G 1/2	G 3/8
FANH 1520	1450	15.0	4.0	200	20	2900	6.0	8.0	8.0	G 1/2	G 3/8
FANH 1525	1450	15.0	4.0	250	25	3625	7.5	10.1	8.0	G 1/2	G 3/8
FANH 1820	1450	18.0	4.8	200	20	2900	7.2	9.6	8.0	G 1/2	G 3/8
FANH 1217	1750	12.1	3.2	170	17	2465	4.1	5.5	8.0	G 1/2	G 3/8
FANH 1512	1750	15.7	4.1	120	12	1740	3.8	5.0	8.0	G 1/2	G 3/8
FANH 1825	1750	18.1	4.8	250	25	3625	9.1	12.1	7.2	G 1/2	G 3/8
FANH 2120	1750	21.7	5.7	200	20	2900	8.7	11.6	7.2	G 1/2	G 3/8

DIMENSION DIAGRAM (mm)

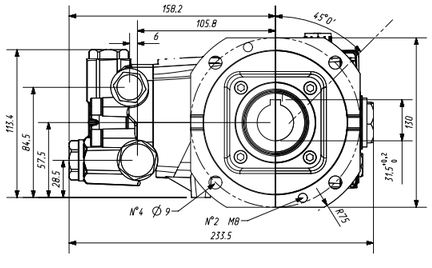

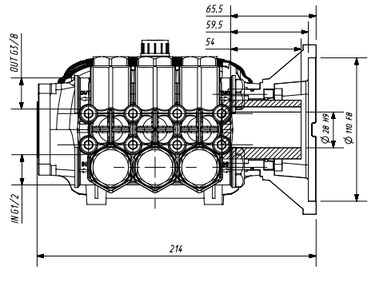

FAS

Soild Shaft Ø 24mm

TECHNICAL PARAMETERS

Model	Speed	Flow Rate		Pressure			Power		Weight	Inlet	Outlet
	RPM	L/min	GPM	Bar	Mpa	PSI	kW	HP	kg	Thread	Thread
FAS 1017	1450	10.0	2.6	170	17	2465	3.4	4.6	7.2	G 1/2	G 3/8
FAS 1312	1450	13.0	3.4	120	12	1740	3.1	4.2	7.2	G 1/2	G 3/8
FAS 1520	1450	15.0	4.0	200	20	2900	6.0	8.0	7.2	G 1/2	G 3/8
FAS 1525	1450	15.0	4.0	250	25	3625	7.5	10.1	7.2	G 1/2	G 3/8
FAS 1820	1450	18.0	4.8	200	20	2900	7.2	9.6	7.2	G 1/2	G 3/8
FAS 1217	1750	12.1	3.2	170	17	2465	4.1	5.5	7.2	G 1/2	G 3/8
FAS 1512	1750	15.7	4.1	120	12	1740	3.8	5.0	7.2	G 1/2	G 3/8
FAS 1825	1750	18.1	4.8	250	25	3625	9.1	12.1	7.2	G 1/2	G 3/8
FAS 2120	1750	21.7	5.7	200	20	2900	8.7	11.6	7.2	G 1/2	G 3/8

DIMENSION DIAGRAM (mm)

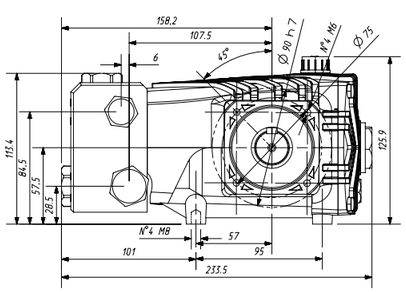

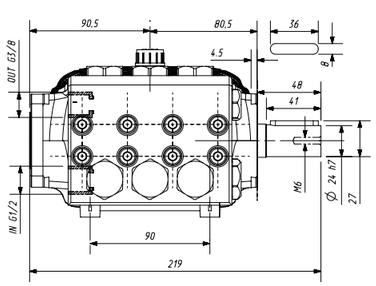

FASH

Hollow Shaft Ø 28mm

TECHNICAL PARAMETERS

Model	Speed	Flow Rate		Pressure			Power		Weight	Inlet	Outlet
	RPM	L/min	GPM	Bar	Mpa	PSI	kW	HP	kg	Thread	Thread
FASH 1017	1450	10.0	2.6	170	17	2466	3.4	4.6	8.0	G 1/2	G 3/8
FASH 1312	1450	13.0	3.4	120	12	1740	3.1	4.2	8.0	G 1/2	G 3/8
FASH 1520	1450	15.0	4.0	200	20	2900	6.0	8.0	8.0	G 1/2	G 3/8
FASH 1525	1450	15.0	4.0	250	25	3625	7.5	10.1	8.0	G 1/2	G 3/8
FASH 1820	1450	18.0	4.8	200	20	2900	7.2	9.6	8.0	G 1/2	G 3/8
FASH 1217	1750	12.1	3.2	170	17	2465	4.1	5.5	8.0	G 1/2	G 3/8
FASH 1512	1750	15.7	4.1	120	12	1740	3.8	5.0	8.0	G 1/2	G 3/8
FASH 1825	1750	18.1	4.8	250	25	3625	9.1	12.1	7.2	G 1/2	G 3/8
FASH 2120	1750	21.7	5.7	200	20	2900	8.7	11.6	7.2	G 1/2	G 3/8

DIMENSION DIAGRAM (mm)

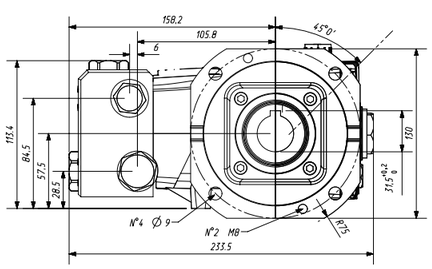

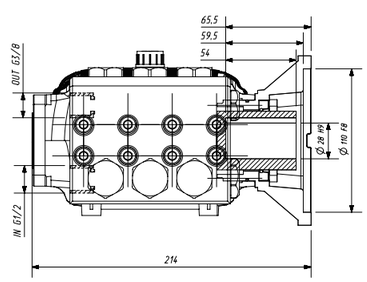

FBB

Soild Shaft Ø24mm

TECHNICAL PARAMETERS

Model	Speed	Flow Rate		Pressure			Power		Weight	Inlet	Outlet
	RPM	L/min	GPM	Bar	Mpa	PSI	kW	HP	kg	Thread	Thread
FBB 1035	1450	10.0	2.6	350	35	5075	7.0	9.4	10.7	G 1/2	G 3/8
FBB 1530	1450	15.0	4.0	300	30	4350	9.0	12.1	10.7	G 1/2	G 3/8
FBB 1535	1450	15.0	4.0	350	35	5075	10.5	14.1	10.7	G 1/2	G 3/8
FBB 1828	1450	18.0	4.8	280	28	4060	10.1	13.5	10.7	G 1/2	G 3/8
FBB 2125	1450	21.0	5.5	250	25	3625	10.5	14.1	10.7	G 1/2	G 3/8
FBB 1235	1750	12.1	3.2	350	35	5075	8.4	11.3	10.7	G 1/2	G 3/8
FBB 1825	1750	18.1	4.8	250	25	3625	9.1	12.1	10.7	G 1/2	G 3/8
FBB 1835	1750	18.1	4.8	350	35	5075	12.7	17.0	10.7	G 1/2	G 3/8
FBB 2128	1750	21.7	5.7	280	28	4060	12.2	16.3	10.7	G 1/2	G 3/8
FBB 2525	1750	25.3	6.7	250	25	3625	12.7	17.0	10.7	G 1/2	G 3/8

DIMENSION DIAGRAM (mm)

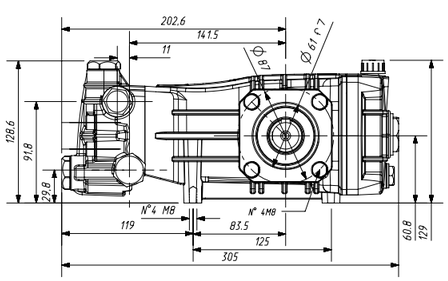

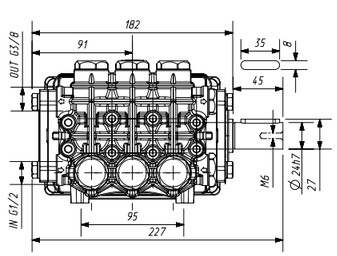

FBN

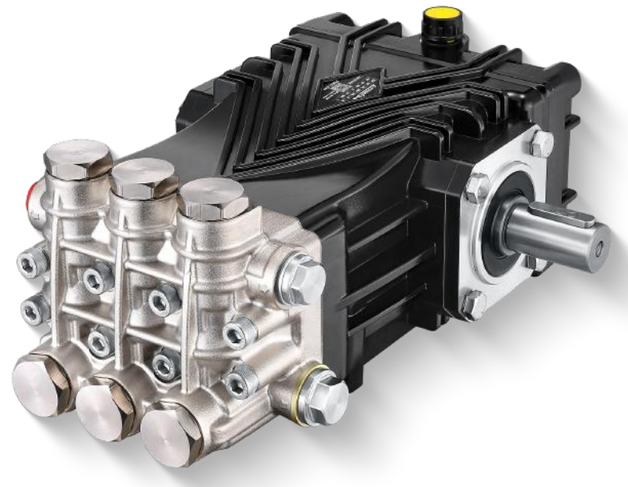

Soild Shaft Ø24mm

TECHNICAL PARAMETERS

Model	Speed	Flow Rate		Pressure			Power		Weight	Inlet	Outlet
	RPM	L/min	GPM	Bar	Mpa	PSI	KW	HP	kg	Thread	Thread
FBN 1035	1450	10.0	2.6	350	35	5075	7.0	9.4	10.7	G 1/2	G 3/8
FBN 1530	1450	15.0	4.0	300	30	4350	9.0	12.1	10.7	G 1/2	G 3/8
FBN 1535	1450	15.0	4.0	350	35	5075	10.5	14.1	10.7	G 1/2	G 3/8
FBN 1828	1450	18.0	4.8	280	28	4060	10.1	13.5	10.7	G 1/2	G 3/8
FBN 2125	1450	21.0	5.5	250	25	3625	10.5	14.1	10.7	G 1/2	G 3/8
FBN 1235	1750	12.1	3.2	350	35	5075	8.4	11.3	10.7	G 1/2	G 3/8
FBN 1825	1750	18.1	4.8	250	25	3625	9.1	12.1	10.7	G 1/2	G 3/8
FBN 1835	1750	18.1	4.8	350	35	5075	12.7	17.0	10.7	G 1/2	G 3/8
FBN 2128	1750	21.7	5.7	280	28	4060	12.2	16.3	10.7	G 1/2	G 3/8
FBN 2525	1750	25.3	6.7	250	25	3625	12.7	17.0	10.7	G 1/2	G 3/8
FBN 3620	1750	36.2	9.6	200	20	2900	14.5	19.4	10.7	G 1/2	G 3/8

DIMENSION DIAGRAM (mm)

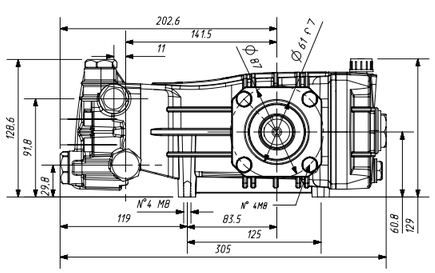

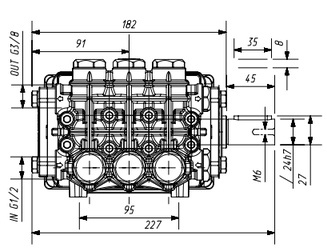

FBS

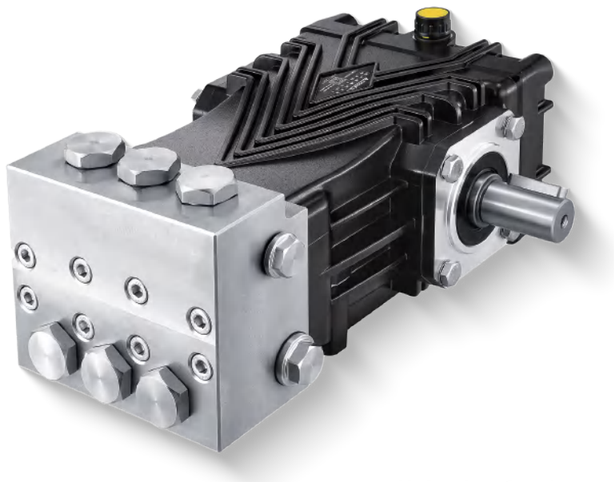

Soild Shaft Ø24mm

TECHNICAL PARAMETERS

Model	Speed	Flow Rate		Pressure			Power		Weight	Inlet	Outlet
	RPM	L/min	GPM	Bar	Mpa	PSI	kW	HP	kg	Thread	Thread
FBS 1035	1450	10.0	2.6	350	35	5075	7.0	9.4	13.5	G 1/2	G 3/8
FBS 1530	1450	15.0	4.0	300	30	4350	9.0	12.1	13.5	G 1/2	G 3/8
FBS 1535	1450	15.0	4.0	350	35	5075	10.5	14.1	13.5	G 1/2	G 3/8
FBS 1828	1450	18.0	4.8	280	28	4060	10.1	13.5	13.5	G 1/2	G 3/8
FBS 2125	1450	21.0	5.5	250	25	3625	10.5	14.1	13.5	G 1/2	G 3/8
FBS 3020	1450	30.0	7.9	200	20	2900	12.0	16.1	13.5	G 1/2	G 3/8
FBS 1235	1750	12.1	3.2	350	35	5075	8.4	11.3	13.5	G 1/2	G 3/8
FBS 1825	1750	18.1	4.8	250	25	3625	9.1	12.1	13.5	G 1/2	G 3/8
FBS 1835	1750	18.1	4.8	350	35	5075	12.7	17.0	13.5	G 1/2	G 3/8
FBS 2128	1750	21.7	5.7	280	28	4060	12.2	16.3	13.5	G 1/2	G 3/8
FBS 2525	1750	25.3	6.7	250	25	3625	12.7	17.0	13.5	G 1/2	G 3/8
FBS 3620	1750	36.2	9.6	200	20	2900	14.5	19.4	13.5	G 1/2	G 3/8

DIMENSION DIAGRAM (mm)

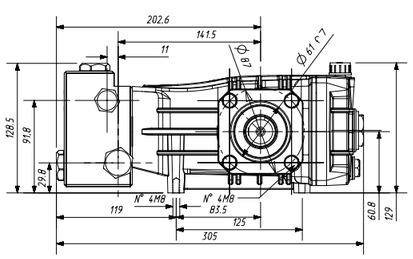

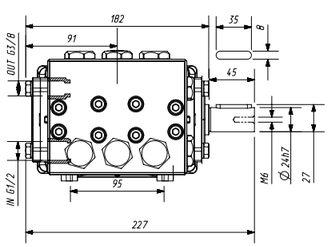

FCB

Soild Shaft Ø24mm

TECHNICAL PARAMETERS

Model	Speed	Flow Rate		Pressure			Power		Weight	Inlet	Outlet
	RPM	L/min	GPM	Bar	Mpa	PSI	kW	HP	kg	Thread	Thread
FCB 1550	1450	15.0	4.2	500	50	7250	15.0	21.5	20.5	G 1/2	G 3/8
FCB 1860	1450	18.0	4.8	600	60	8700	22.0	29.0	20.5	G 1/2	G 3/8
FCB 2250	1450	22.0	5.8	500	50	7250	22.0	29.5	20.5	G 1/2	G 3/8
FCB 1850	1750	18.0	5.1	500	50	7250	18.0	25.9	20.5	G 1/2	G 3/8
FCB 2260	1750	22.0	5.7	600	60	8700	26.4	35.0	20.5	G 1/2	G 3/8
FCB 2650	1750	26.0	7.0	500	50	7250	26.6	35.6	20.5	G 1/2	G 3/8

DIMENSION DIAGRAM (mm)

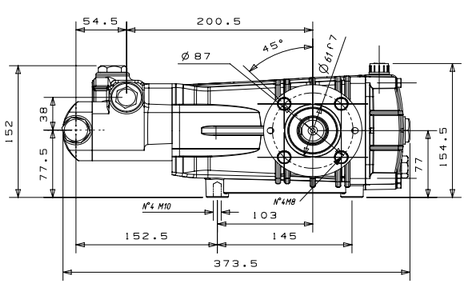

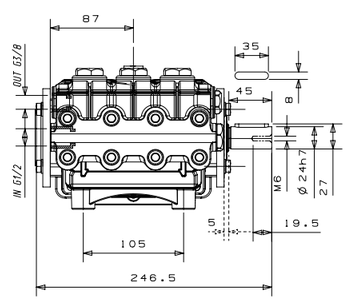

FCN

Soild Shaft Ø24mm

TECHNICAL PARAMETERS

Model	Speed	Flow Rate		Pressure			Power		Weight	Inlet	Outlet
	RPM	L/min	GPM	Bar	Mpa	PSI	kW	HP	kg	Thread	Thread
FCN 1550	1450	16.0	4.2	500	50	7250	15.0	21.5	20.5	G 1/2	G 3/8
FCN 1860	1450	18.0	4.8	600	60	8700	22.0	29.0	20.5	G 1/2	G 3/8
FCN 2250	1450	22.0	5.8	500	50	7250	22.0	29.5	20.5	G 1/2	G 3/8
FCN 1850	1750	18.0	5.1	500	50	7250	19.3	25.9	20.5	G 1/2	G 3/8
FCN 2260	1750	22.0	5.7	600	60	8700	26.1	35.0	20.5	G 1/2	G 3/8
FCN 2650	1750	26.0	7.0	500	50	7250	26.6	35.6	20.5	G 1/2	G 3/8

DIMENSION DIAGRAM (mm)

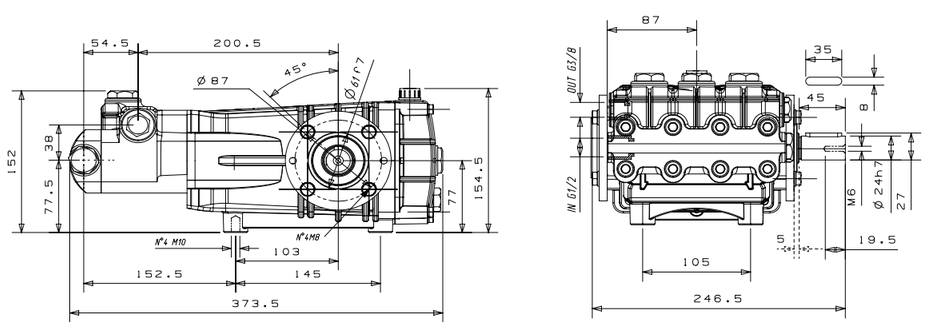

FCH

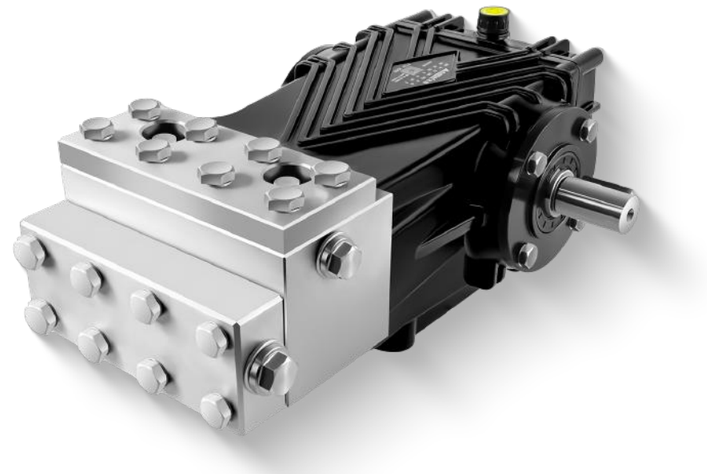

Soild Shaft Ø24mm

TECHNICAL PARAMETERS

Model	Speed	Flow Rate		Pressure			Power		Weight	Inlet	Outlet
	RPM	L/min	GPM	Bar	Mpa	PSI	kW	HP	kg	Thread	Thread
FCH 1550	1450	15.0	4.2	500	50	7250	15.0	21.5	23.1	G 1/2	G 3/8
FCH 1860	1450	18.0	4.8	600	60	8700	21.6	29.0	23.1	G 1/2	G 3/8
FCH 2250	1450	22.0	5.8	500	50	7250	22.0	29.5	23.1	G 1/2	G 3/8
FCH 1850	1750	18.0	5.1	500	50	7250	19.3	25.9	23.1	G 1/2	G 3/8
FCH 2260	1750	22.6	5.7	600	60	8700	26.1	35.0	23.1	G 1/2	G 3/8
FCH 2650	1750	26.0	7.0	500	50	7250	26.6	35.6	23.1	G 1/2	G 3/8

DIMENSION DIAGRAM (mm)

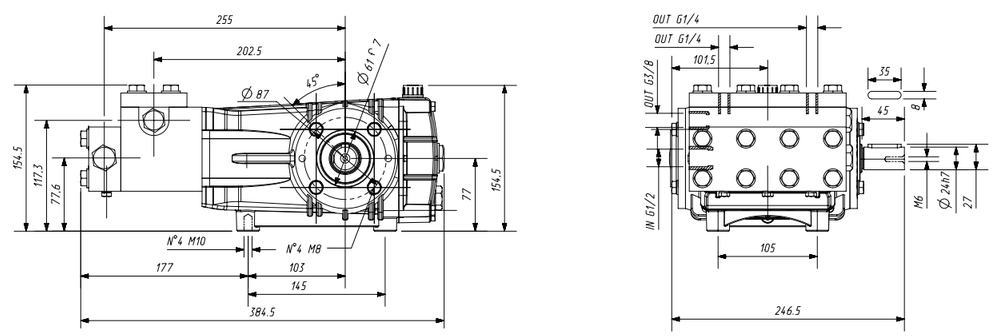

FCC

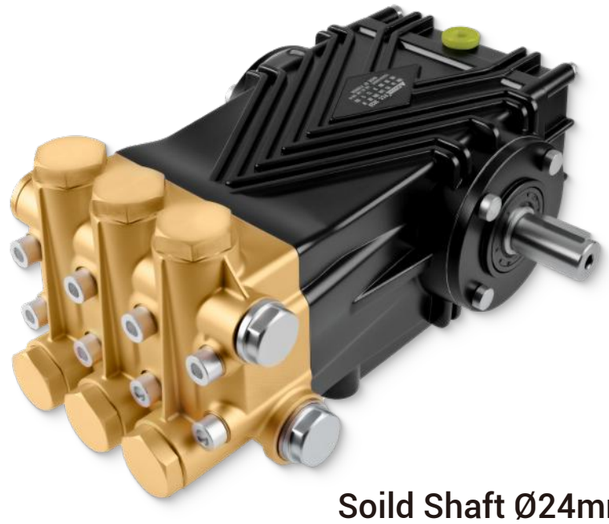

Soild Shaft Ø24mm

TECHNICAL PARAMETERS

Model	Speed	Flow Rate		Pressure			Power		Weight	Inlet	Outlet
	RPM	L/min	GPM	Bar	Mpa	PSI	kW	HP	kg	Thread	Thread
FCC 2135	1450	21.0	5.5	350	35	5075	15.0	19.7	17.5	G 3/4	G 1/2
FCC 3020	1450	30.0	7.9	200	20	2900	12.0	26.8	17.5	G 3/4	G 1/2
FCC 3030	1450	30.0	7.9	300	30	4350	18.0	24.1	17.5	G 3/4	G 1/2
FCC 4025	1450	40.0	10.5	250	25	3525	20.0	28.0	17.5	G 3/4	G 1/2
FCC 5020	1450	50.0	13.2	200	20	2900	20.0	29.0	17.5	G 3/4	G 1/2
FCC 3620	1750	36.0	9.5	200	20	2900	14.4	32.4	17.5	G 3/4	G 1/2
FCC 4819	1750	48.0	12.6	190	19	3625	24.0	33.8	17.5	G 3/4	G 1/2
FCC 6018	1750	60.0	15.8	180	18	2900	24.0	35.0	17.5	G 3/4	G 1/2

DIMENSION DIAGRAM (mm)

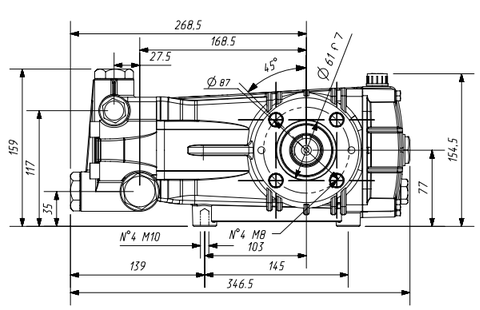

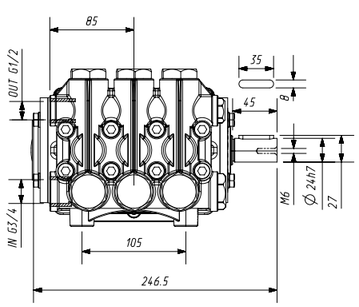

FCK

Soild Shaft Ø24mm

TECHNICAL PARAMETERS

Model	Speed	Flow Rate		Pressure			Power		Weight	Inlet	Outlet
	RPM	L/min	GPM	Bar	Mpa	PSI	kW	HP	kg	Thread	Thread
FCK 2135	1450	21.0	5.5	350	35	5075	15.0	19.7	17.5	G 3/4	G 1/2
FCK 3020	1450	30.0	7.9	200	20	2900	12.0	26.8	17.5	G 3/4	G 1/2
FCK 3030	1450	30.0	7.9	300	30	4350	18.0	24.1	17.5	G 3/4	G 1/2
FCK 4025	1450	40.0	10.5	250	25	3525	20.0	28.0	17.5	G 3/4	G 1/2
FCK 5020	1450	50.0	13.2	200	20	2900	20.0	29.0	17.5	G 3/4	G 1/2
FCK 3620	1750	36.0	9.5	200	20	2900	14.4	32.4	17.5	G 3/4	G 1/2
FCK 4819	1750	48.0	12.6	190	19	3625	24.0	33.8	17.5	G 3/4	G 1/2
FCK 6018	1750	60.0	15.8	180	18	2900	24.0	35.0	17.5	G 3/4	G 1/2

DIMENSION DIAGRAM (mm)

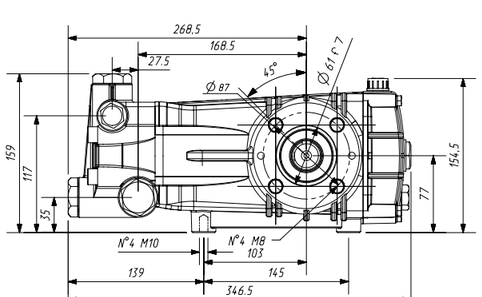

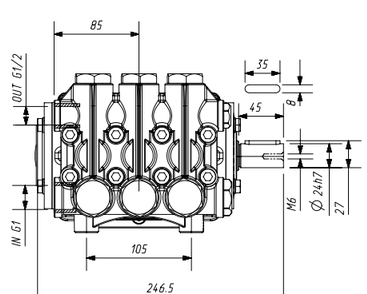

FCR

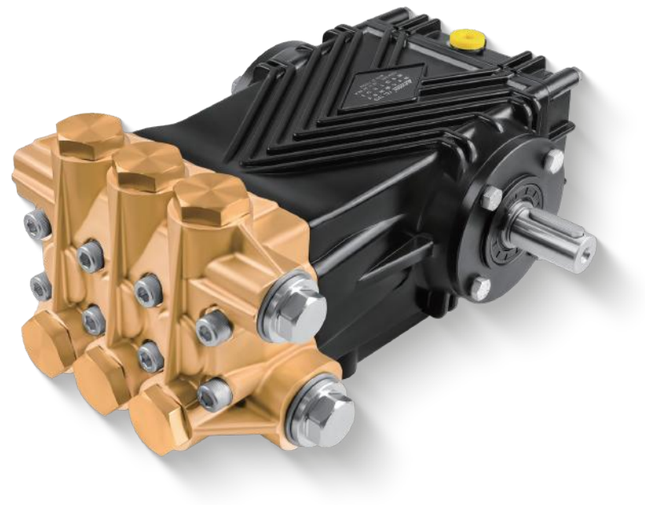

Soild Shaft Ø24mm

TECHNICAL PARAMETERS

Model	Speed	Flow Rate		Pressure			Power		Weight	Inlet	Outlet
	RPM	L/min	GPM	Bar	Mpa	PSI	kW	HP	kg	Thread	Thread
FCR 6017	1450	60.0	15.8	170	17	2465	20.4	29.6	19.5	G 1	G 1/2
FCR 7016	1450	70.0	18.5	160	16	2320	22.4	29.1	19.5	G 1	G 1/2
FCR 7217	1750	72.0	19.0	170	17	2465	24.5	35.8	19.5	G 1	G 1/2
FCR 8416	1750	84.0	22.2	160	16	2320	26.8	36.3	19.5	G 1	G 1/2

DIMENSION DIAGRAM (mm)

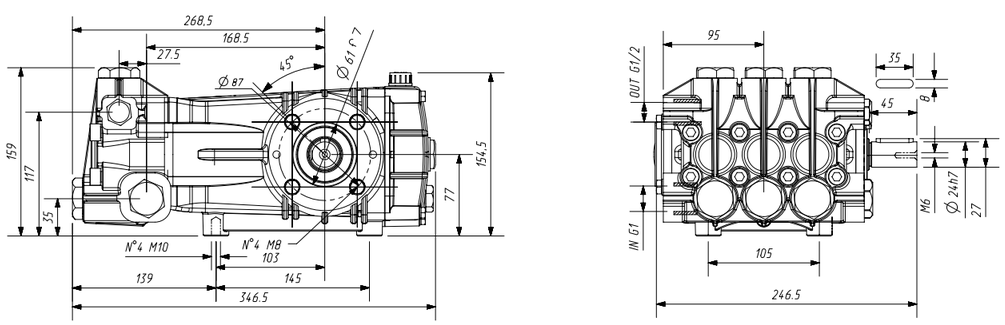

FCM

Soild Shaft Ø24mm

TECHNICAL PARAMETERS

Model	Speed	Flow Rate		Pressure			Power		Weight	Inlet	Outlet
	RPM	L/min	GPM	Bar	Mpa	PSI	kW	HP	kg	Thread	Thread
FCM 6017	1450	60.0	15.8	170	17	2465	20.4	29.6	19.5	G 1	G 1/2
FCM 7016	1450	70.0	18.5	160	16	2320	22.4	29.1	19.5	G 1	G 1/2
FCM 7217	1750	72.0	19.0	170	17	2465	24.5	35.8	19.5	G 1	G 1/2
FCM 8416	1750	84.0	22.2	160	16	2320	26.8	36.3	19.5	G 1	G 1/2

DIMENSION DIAGRAM (mm)

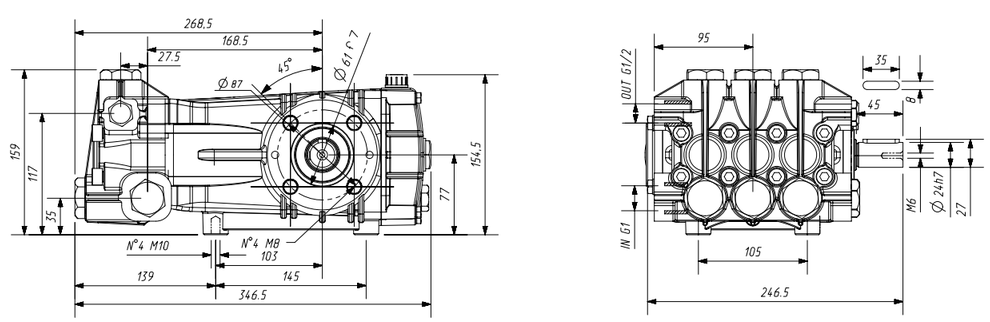

FCL

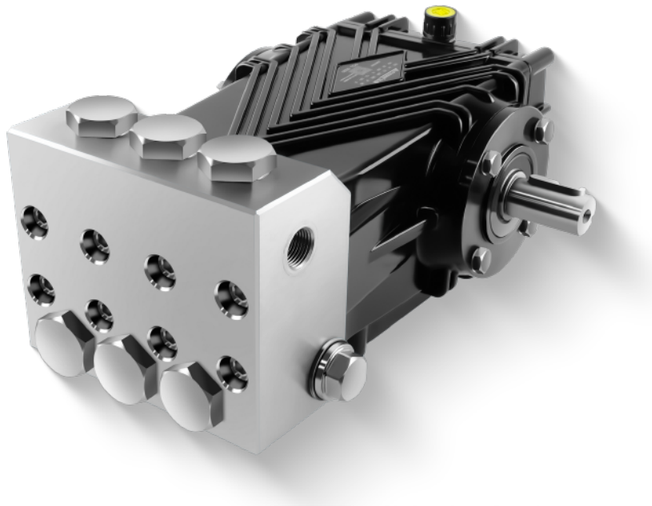

Soild Shaft Ø24mm

TECHNICAL PARAMETERS

Model	Speed	Flow Rate		Pressure			Power		Weight	Inlet	Outlet
	RPM	L/min	GPM	Bar	Mpa	PSI	kW	HP	kg	Thread	Thread
FCL 3030	1450	30.0	7.9	300	30	4350	18.0	24.1	16.8	G 3/4	G 1/2
FCL 4025	1450	40.0	10.5	250	25	3625	20.0	26.8	16.8	G 3/4	G 1/2
FCL 5020	1450	50.0	13.2	200	20	2900	20.0	26.8	16.8	G 3/4	G 1/2
FCL 6018	1450	60.0	15.9	180	18	2610	21.6	29.0	16.8	G 3/4	G 1/2
FCL 3630	1750	36.2	9.6	300	30	4350	21.7	29.1	16.8	G 3/4	G 1/2
FCL 4825	1750	48.0	12.7	250	25	3625	24.0	32.1	16.8	G 3/4	G 1/2
FCL 6020	1750	60.3	15.9	200	19	2755	24.0	32.1	16.8	G 3/4	G 1/2
FCL 7218	1750	72.4	19.1	180	18	2610	26.1	35.0	16.8	G 3/4	G 1/2

DIMENSION DIAGRAM (mm)

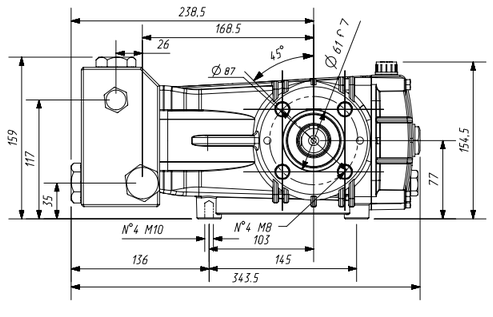

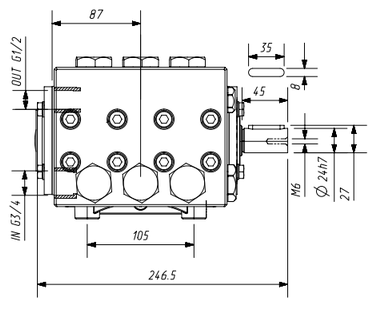

FDH

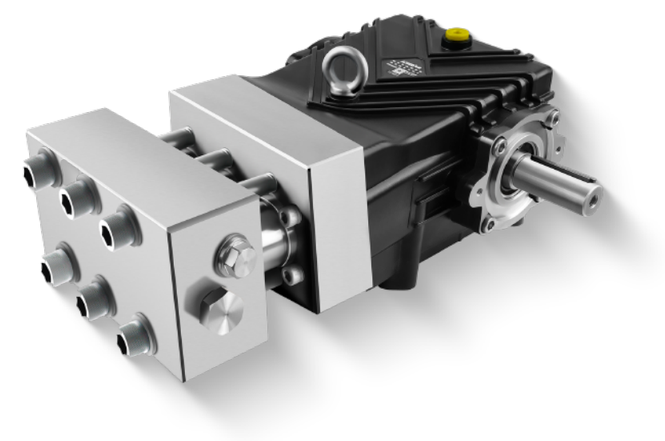

Soild Shaft Ø30mm

TECHNICAL PARAMETERS

Model	Speed	Flow Rate		Pressure			Power		Weight	Inlet	Outlet
	RPM	L/min	GPM	Bar	Mpa	PSI	kW	HP	kg	Thread	Thread
FDH 15100	1450	15.0	4.0	1000	100	14500	28.8	38.7	42.0	G 1/2	G 1/2
FDH 1880	1450	18.0	4.8	800	80	11600	27.7	37.1	42.0	G 1/2	G 1/2
FDH 18100	1750	18.0	4.2	1000	100	14500	30.8	41.3	42.0	G 1/2	G 1/2
FDH 2080	1750	20.0	5.3	800	80	11600	30.8	41.3	42.0	G 1/2	G 1/2

DIMENSION DIAGRAM (mm)

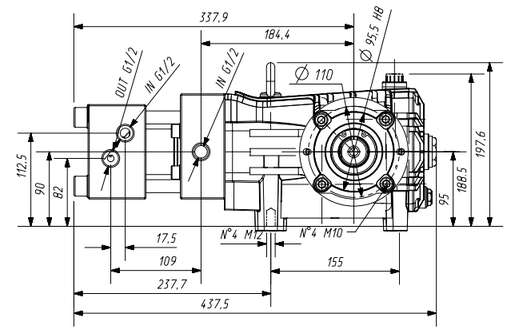

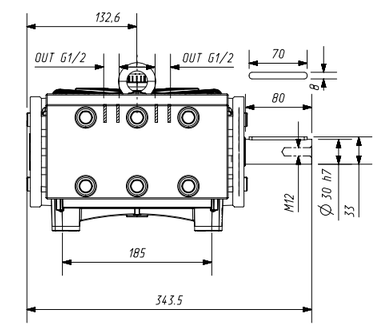

FDK

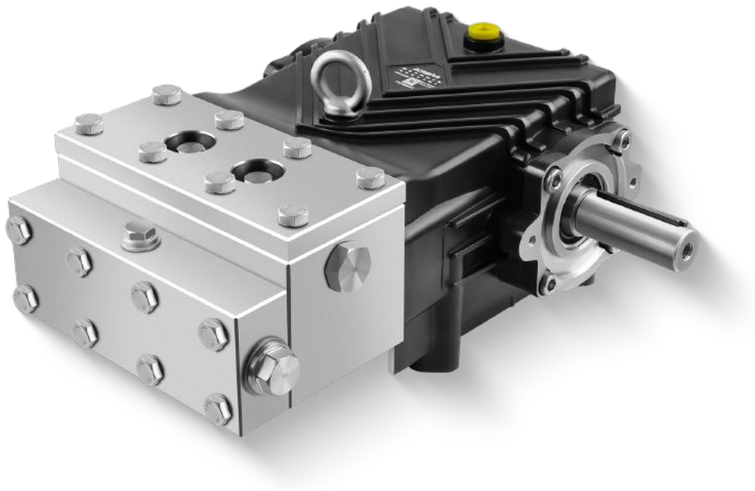

Soild Shaft Ø30mm

TECHNICAL PARAMETERS

Model	Speed	Flow Rate		Pressure			Power		Weight	Inlet	Outlet
	RPM	L/min	GPM	Bar	Mpa	PSI	kW	HP	kg	Thread	Thread
FDK 3050	1450	30.0	7.9	500	50	7250	30.0	40.2	38.5	G 3/4	G 1/2
FDK 4035	1450	40.0	10.5	350	35	5075	28.0	37.5	38.5	G 3/4	G 1/2
FDK 5030	1450	50.0	13.2	300	30	4350	30.0	40.2	38.5	G 3/4	G 1/2
FDK 5525	1450	55.0	14.5	250	25	3625	27.5	36.8	38.5	G 3/4	G 1/2
FDK 3650	1750	36.0	9.5	500	50	7250	36.0	48.2	38.5	G 3/4	G 1/2
FDK 4835	1750	48.0	12.6	350	35	5075	33.5	45.0	38.5	G 3/4	G 1/2
FDK 6030	1750	60.0	15.8	300	30	4350	36.0	48.2	38.5	G 3/4	G 1/2
FDK 6625	1750	66.0	17.4	250	25	3625	33.0	44.2	38.5	G 3/4	G 1/2

DIMENSION DIAGRAM (mm)

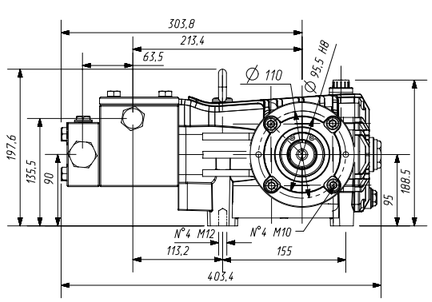

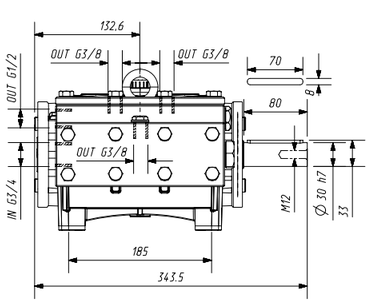

FDL

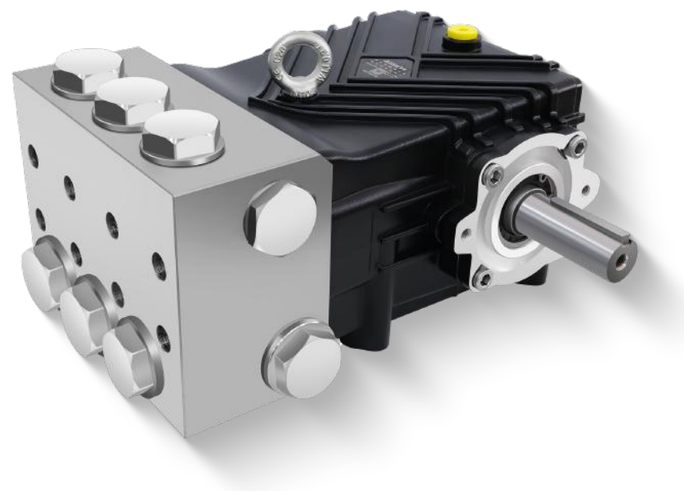

Soild Shaft Ø30mm

TECHNICAL PARAMETERS

Model	Speed	Flow Rate		Pressure			Power		Weight	Inlet	Outlet
	RPM	L/min	GPM	Bar	Mpa	PSI	kW	HP	kg	Thread	Thread
FDL 10015	1450	100.0	26.4	150	15	2175	28.8	38.7	39.5	G 1"1/4	G 1"
FDL 12013	1450	120.0	31.7	130	13	1885	30.0	40.2	39.5	G 1"1/4	G 1"
FDL 15010	1450	150.0	39.6	100	10	1450	28.8	38.7	39.5	G 1"1/4	G 1"
FDL 6915	1000	69.0	18.2	150	15	2175	19.9	26.7	39.5	G 1"1/4	G 1"
FDL 8213	1000	82.8	21.9	130	13	1885	20.7	27.7	39.5	G 1"1/4	G 1"
FDL 10310	1000	103.0	27.3	100	10	1411	19.9	26.7	39.5	G 1"1/4	G 1"

DIMENSION DIAGRAM (mm)

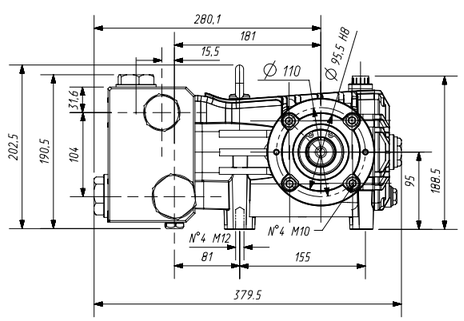

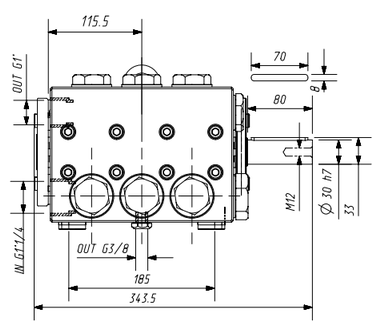

FEH

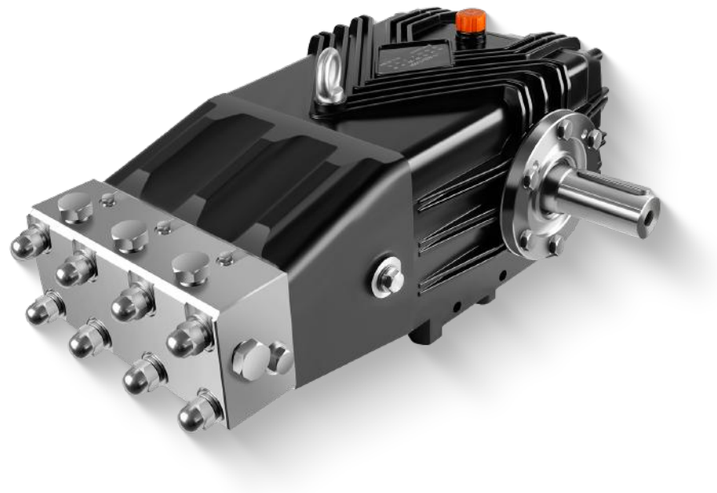

Soild Shaft Ø40mm

TECHNICAL PARAMETERS

Model	Speed	Flow Rate		Pressure			Power		Weight	Inlet	Outlet
	RPM	L/min	GPM	Bar	Mpa	PSI	kW	HP	kg	Thread	Thread
FEH 20100	1000	20.0	5.3	1000	100	14500	38.5	51.6	65.5	G 1/2	G 1/2
FEH 20120	1000	20.0	5.3	1200	120	17400	46.2	61.9	65.5	G 1/2	G 1/2
FEH 25100	1000	25.0	6.6	1000	100	14500	48.1	64.5	65.5	G 1/2	G 1/2
FEH 2580	1000	25.0	6.6	800	80	11600	38.5	51.6	65.5	G 1/2	G 1/2

DIMENSION DIAGRAM (mm)

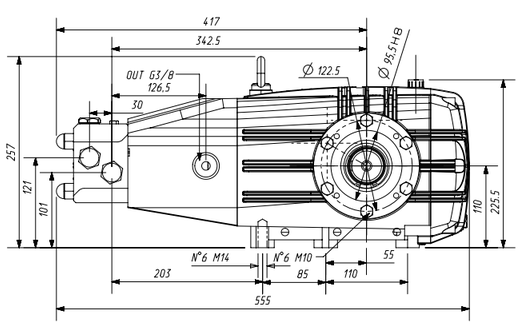

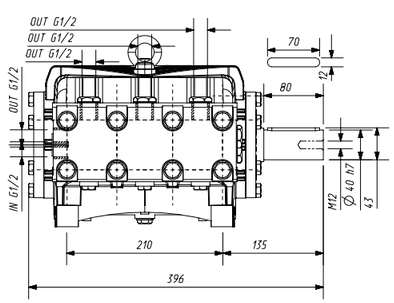

FES

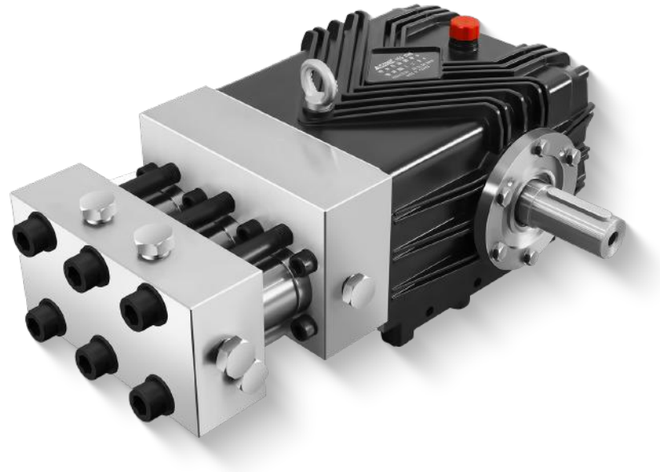

Soild Shaft Ø40mm

TECHNICAL PARAMETERS

Model	Speed	Flow Rate		Pressure			Power		Weight	Inlet	Outlet
	RPM	L/min	GPM	Bar	Mpa	PSI	kW	HP	kg	Thread	Thread
FES 15150	800	15	3.9	1500	150	21755	45.0	60.0	79.0	G 1/2	G 1/2
FES 10200	800	10	2.6	2000	200	29000	40.0	53.6	79.0	G 1/2	G 1/2

DIMENSION DIAGRAM (mm)

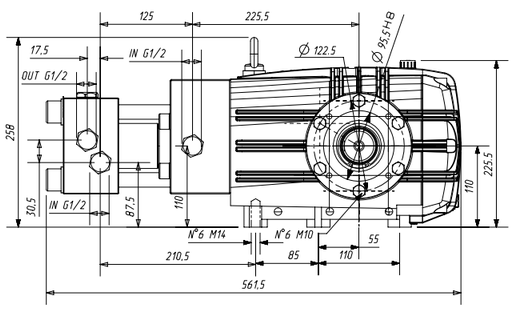

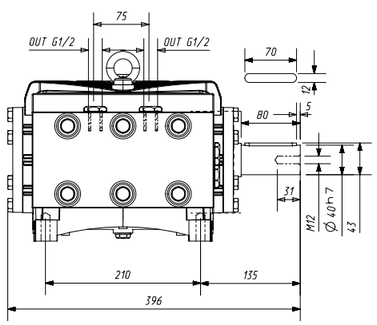

FEK

Soild Shaft Ø40mm

TECHNICAL PARAMETERS

Model	Speed	Flow Rate		Pressure			Power		Weight	Inlet	Outlet
	RPM	L/min	GPM	Bar	Mpa	PSI	kW	HP	kg	Thread	Thread
FEK 3075	1000	30.0	7.9	750	75	10875	43.3	58.0	68.0	G 1"	G 1/2
FEK 3665	1000	36.0	9.5	650	65	9425	45.0	60.3	68.0	G 1"	G 1/2
FEK 4060	1000	40.0	10.6	600	60	8700	46.2	61.9	68.0	G 1"	G 1/2
FEK 4850	1000	48.0	12.7	500	50	7250	46.2	61.9	68.0	G 1"	G 1/2
FEK 5045	1000	50.0	13.2	450	45	6525	43.3	58.0	68.0	G 1"	G 1/2

DIMENSION DIAGRAM (mm)

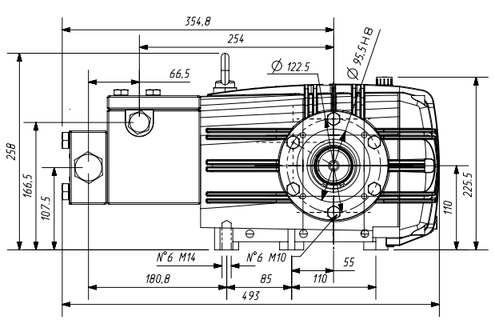

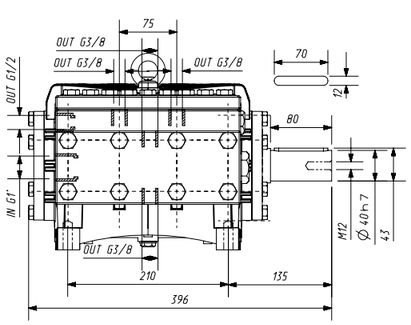

FEL

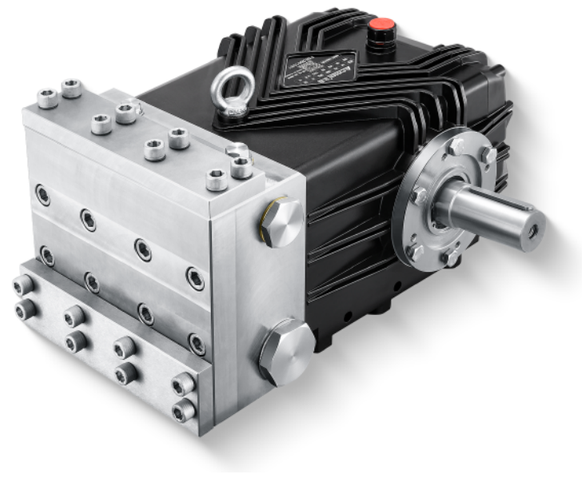

Soild Shaft Ø40mm

TECHNICAL PARAMETERS

Model	Speed	Flow Rate		Pressure			Power		Weight	Inlet	Outlet
	RPM	L/min	GPM	Bar	Mpa	PSI	kW	HP	kg	Thread	Thread
FEL 7535	1000	75.0	19.8	350	35	5075	50.5	67.7	70.5	G 1"1/2	G 1"
FEL 10020	1000	100.0	26.4	200	20	2900	38.5	51.6	70.5	G 1"1/2	G 1"
FEL 13022	1000	130.0	34.3	220	22	3190	55.0	73.8	70.5	G 1"1/2	G 1"
FEL 16018	1000	160.0	42.3	180	18	2610	55.4	74.3	70.5	G 1"1/2	G 1"
FEL 20010	1000	200.0	52.8	100	10	1450	38.5	51.6	70.5	G 1"1/2	G 1"
FEL 21516	1000	215.0	56.8	160	16	2320	66.2	88.7	70.5	G 1"1/2	G 1"

DIMENSION DIAGRAM (mm)

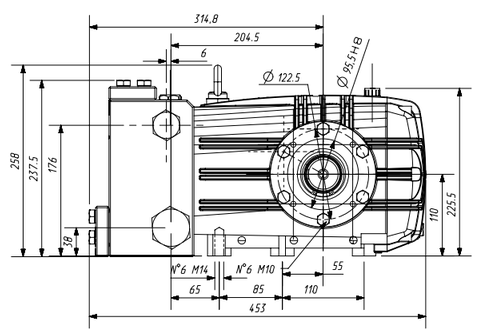

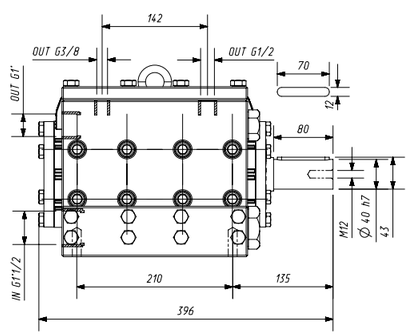

FEK-G

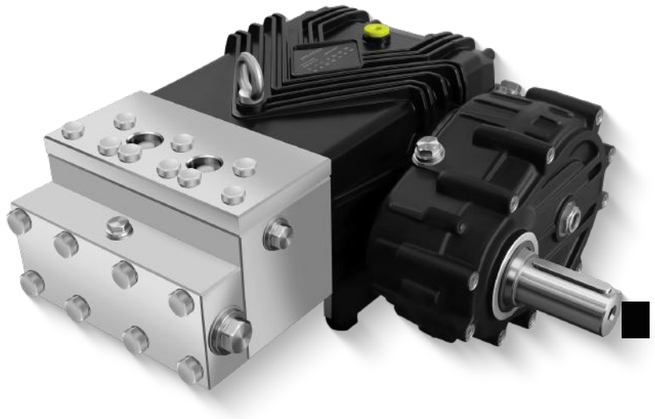

Soild Shaft Ø40mm

TECHNICAL PARAMETERS

Model	Speed	Flow Rate		Pressure			Power		Weight	Inlet	Outlet
	RPM	L/min	GPM	Bar	Mpa	PSI	kW	HP	kg	Thread	Thread
FEK-G 3075	1000	30.0	7.9	750	75	10875	43.3	58.0	68.0	G 1"	G 1/2
FEK-G 3665	1000	36.0	9.5	650	65	9425	45.0	60.3	68.0	G 1"	G 1/2
FEK-G 4060	1000	40.0	10.6	600	60	8700	46.2	61.9	68.0	G 1"	G 1/2
FEK-G 4850	1000	48.0	12.7	500	50	7250	46.2	61.9	68.0	G 1"	G 1/2
FEK-G 5045	1000	50.0	13.2	450	45	6525	43.3	58.0	68.0	G 1"	G 1/2
FEK-G 2275	750	22.5	5.9	750	75	10875	32.5	43.5	68.0	G 1"	G 1/2
FEK-G 2765	750	27.0	7.1	650	65	9425	33.8	45.3	68.0	G 1"	G 1/2
FEK-G 3060	750	30.0	7.9	600	60	8700	34.6	46.4	68.0	G 1"	G 1/2
FEK-G 3650	750	36.0	9.5	500	50	7250	34.6	46.4	68.0	G 1"	G 1/2
FEK-G 3745	750	37.5	9.9	450	45	6525	32.5	43.5	68.0	G 1"	G 1/2

DIMENSION DIAGRAM (mm)

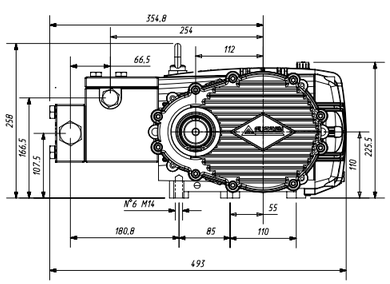

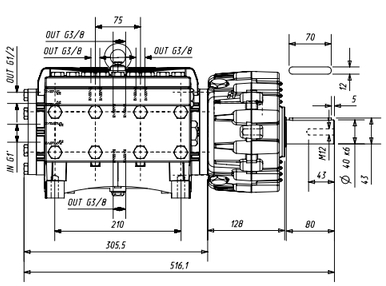

FES-G

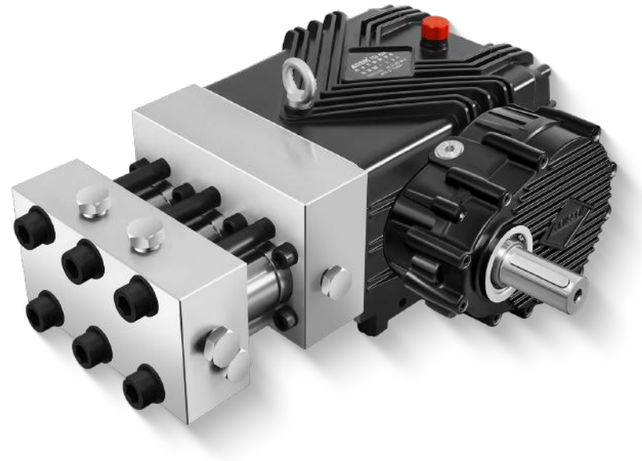

Soild Shaft Ø40mm

TECHNICAL PARAMETERS

Model	Speed	Flow Rate		Pressure			Power		Weight	Inlet	Outlet
	RPM	L/min	GPM	Bar	Mpa	PSI	kW	HP	kg	Thread	Thread
FES-G15150	800	15	3.9	1500	150	21755	45.0	60.0	79.0	G 1/2	G 1/2
FES-G10200	800	10	2.6	2000	200	29000	40.0	53.6	79.0	G 1/2	G 1/2

DIMENSION DIAGRAM (mm)

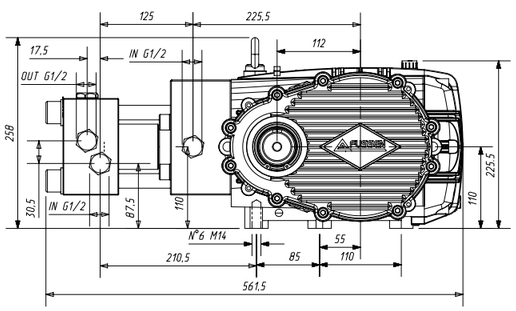

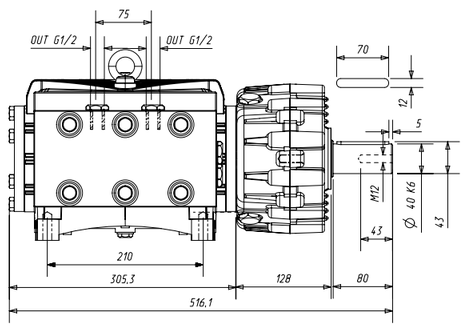

FFS-G

Soild Shaft Ø60mm

TECHNICAL PARAMETERS

Model	Speed	Flow Rate		Pressure			Power		Weight	Inlet	Outlet
	RPM	L/min	GPM	Bar	Mpa	PSI	kW	HP	kg	Thread	Thread
FFS-G 25150	600	27	7.1	1500	150	21750	67.5	58.0	310	G 1"	G 3/4
FFS-G 30130	600	33.9	9.0	1300	130	18,850	73.5	61.9	310	G 1"	G 3/4
FFS-G 45100	600	48	12.7	1000	100	14,500	80	61.9	310	G 1"	G 3/4
FFS-G 6080	800	65	17.2	800	80	11,600	86.7	58.0	310	G 1"	G 3/4

DIMENSION DIAGRAM (mm)

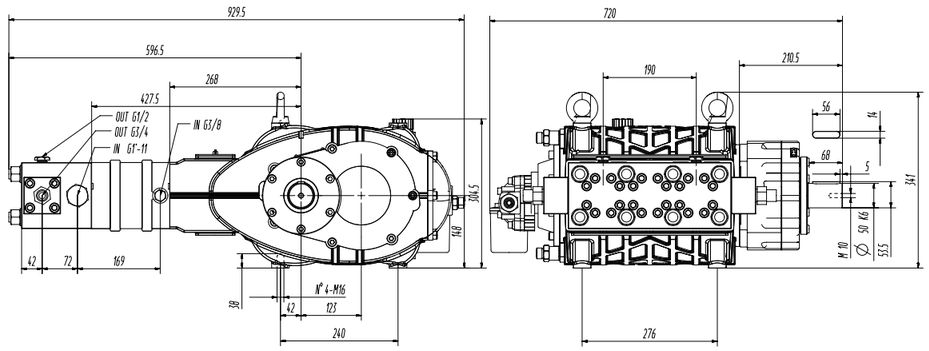

FFS

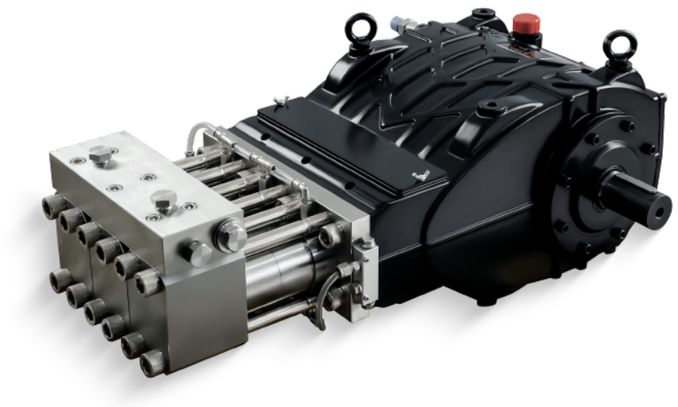

Soild Shaft Ø50mm

TECHNICAL PARAMETERS

Model	Speed	Flow Rate		Pressure			Power		Weight	Inlet	Outlet
	RPM	L/min	GPM	Bar	Mpa	PSI	kW	HP	kg	Thread	Thread
FFS 17126	600	171	45.2	260	26	3770	88.5	118.7	249	G1'1/2	G1'
FFS 13533	600	135	35.7	330	33	4790	89.1	119.5	249	G1'1/2	G1'
FFS 11639	600	116	30.6	410	41	5950	95.1	127.6	249	G1'1/2	G1'
FFS 30150	600	30	7.9	1500	150	21755	90	120.7	249	G1'	G1'1/2
FFS 37120	600	37	9.8	1200	120	17400	88.8	119.1	249	G1'	G1'1/2
FFS 5580	800	55	14.5	800	80	11600	88	118	249	G1'	G1'1/2
FFS 44150	800	45	11.9	1000	100	14500	90	120.7	249	G1'	G1'1/2

DIMENSION DIAGRAM (mm)

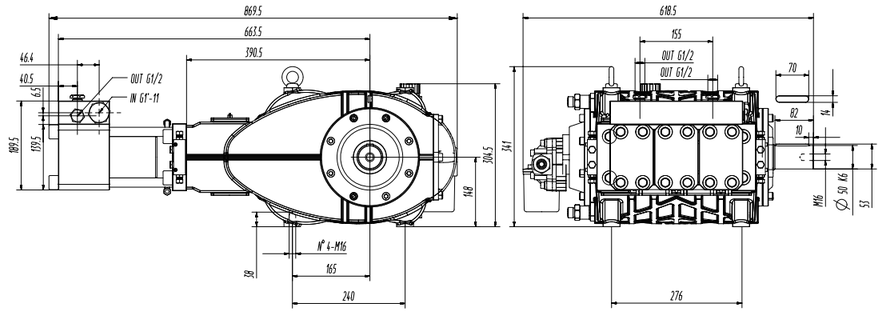

Model	Flow Rate		Pressure		Temp	Inlet	Outlet	By-Pass
	L/min	gpm	bar	psi	°C	thread	thread	thread
FVK25-P	30	7.9	250	3625	80	G3/8	G3/8 G1/2	/

Model	Flow Rate		Pressure		Temp	Inlet	Outlet	By-Pass
	L/min	gpm	bar	psi	°C	thread	thread	thread
FVE25-P	30	7.9	250	3625	80	G3/8	G3/8 G1/2	G1/4

Model	Flow Rate		Pressure		Temp	Inlet	Outlet	By-Pass
	L/min	gpm	bar	psi	°C	thread	thread	thread
FVK25	30	7.9	250	3625	80	G3/8	G3/8 G1/2	/

Model	Flow Rate		Pressure		Temp	Inlet	Outlet	By-Pass
	L/min	gpm	bar	psi	°C	thread	thread	thread
FVE25	30	7.9	250	3625	80	G3/8	G3/8 G1/2	G1/4

Model	Flow Rate		Pressure		Temp	Inlet	Outlet	By-Pass
	L/min	gpm	bar	psi	°C	thread	thread	thread
FV30	40	22.5	300	4350	90	G3/8	G1/2	G1/2

Model	Flow Rate		Pressure		Temp	Inlet	Outlet	By-Pass
	L/min	gpm	bar	psi	°C	thread	thread	thread
FV35	40	10.6	350	5075	90	G3/8	G3/8	G1/2

Model	Flow Rate		Pressure		Temp	Inlet	Outlet	By-Pass
	L/min	gpm	bar	psi	°C	thread	thread	thread
FV50	80	21.1	500	8700	90	G1/2	G1/2	G1/2

Model	Flow Rate		Pressure		Temp	Inlet	Outlet	By-Pass
	L/min	gpm	bar	psi	°C	thread	thread	thread
FV90	60	15.8	900	13050	60	G1/2	G1/2	G1/2

Model	Flow Rate		Pressure		Temp	Inlet	Outlet	By-Pass
	L/min	gpm	bar	psi	°C	thread	thread	thread
FV150	30	10.6	1000	14500	60	G3/8	G3/8	G3/8

Model	Flow Rate		Pressure		Temp	Inlet	Outlet	By-Pass
	L/min	gpm	bar	psi	°C	thread	thread	thread
FVF32	80	21.1	320	4640	90	G1/2	G1/2	G1/2

Model	Flow Rate		Pressure		Temp	Inlet	Outlet	By-Pass
	L/min	gpm	bar	psi	°C	thread	thread	thread
FV60	80	21.1	600	8700	90	G1/2	G1/2	G1/2

Model	Flow Rate		Pressure		Temp	Inlet	Outlet	By-Pass
	L/min	gpm	bar	psi	°C	thread	thread	thread
FV80	80	21.1	800	11600	90	G1/2	G1/2	G1/2

Model	Flow Rate		Pressure		Temp	Inlet	Outlet	By-Pass
	L/min	gpm	bar	psi	°C	thread	thread	thread
FV20	200	52.8	150	2175	90	G1	G1	G1

Model	Flow Rate		Pressure		Temp	Inlet	Outlet	By-Pass
	L/min	gpm	bar	psi	°C	thread	thread	thread
FV20S	200	52.8	150	2175	90	G1	G1	G1

Model	Flow Rate		Pressure		Temp	Inlet	Outlet	By-Pass
	L/min	gpm	bar	psi	°C	thread	thread	thread
FS20	200	52.8	200	2900	80	G3/4	/	G1/2

Model	Flow Rate		Pressure		Temp	Inlet	Outlet	By-Pass
	L/min	gpm	bar	psi	°C	thread	thread	thread
FS30	500	132	300	4350	80	G1	/	G1

Model	Flow Rate		Pressure		Temp	Inlet	Outlet	By-Pass
	L/min	gpm	bar	psi	°C	thread	thread	thread
FS70	80	21.1	700	10150	80	G3/8 G1/2	/	/

Model	Flow Rate		Pressure		Temp	Inlet	Outlet	By-Pass
	L/min	gpm	bar	psi	°C	thread	thread	thread
FS80	80	21.1	800	11600	80	G3/8	/	G1/2

Model	Flow Rate		Pressure		Temp	Inlet	Outlet	By-Pass
	L/min	gpm	bar	psi	°C	thread	thread	thread
FS150	30	7.8	1500	21750	80	G3/8	/	G3/8

Model	Flow Rate		Pressure		Temp	Inlet	Outlet	By-Pass
	L/min	gpm	bar	psi	°C	thread	thread	thread
FSF15	40	10.6	200	2900	80	G3/8	/	G3/8

Nozzle Chart (20 - 200 bar)

FUSSEN®

Nozzle Size		Pressure																			
	Bar	20	30	40	50	60	70	80	90	100	110	120	130	140	150	160	170	180	190	200
	PSI	290	435	580	725	870	1015	1160	1305	1450	1595	1740	1885	2030	2175	2320	2465	2610	2755	2900
	Ø mm	Flow Rate (L/min)																		
015	0.80	1.5	1.9	2.2	2.4	2.6	2.8	3	3.2	3.4	3.6	3.7	3.9	4.0	4.2	4.3	4.4	4.6	4.7	4.8
02	0.91	2.1	2.5	2.9	3.3	3.6	3.8	4.1	4.4	4.6	4.8	5.0	5.2	5.4	5.6	5.8	6.0	6.2	6.3	6.5
025	1.00	2.5	3.1	3.5	4.0	4.3	4.7	5.0	5.3	5.6	5.9	6.1	6.4	6.6	6.9	7.1	7.3	7.5	7.7	7.9
03	1.09	3.0	3.7	4.3	4.8	5.3	5.7	6.1	6.5	6.8	7.1	7.4	7.8	8.0	8.3	8.6	8.9	9.1	9.4	9.6
035	1.15	3.6	4.4	5.1	5.7	6.2	6.7	7.2	7.6	8.0	8.4	8.8	9.1	9.5	9.8	10.1	10.4	10.7	11.0	11.3
04	1.19	4.1	5.0	5.8	6.4	7.0	7.6	8.1	8.6	9.1	9.5	10	10.4	10.8	11.1	11.5	11.9	12.2	12.5	12.9
045	1.27	4.6	5.6	6.5	7.3	8.0	8.6	9.2	9.8	10.3	10.8	11.3	11.7	12.2	12.6	13	13.4	13.8	14.2	14.6
05	1.35	5.1	6.2	7.2	8.1	8.8	9.5	10.2	10.8	11.4	12.0	12.5	13.0	13.5	14.0	14.4	14.9	15.3	15.7	16.1
055	1.40	5.6	6.8	7.9	8.8	9.7	10.5	11.2	11.9	12.5	13.1	13.7	14.3	14.8	15.3	15.8	16.3	16.8	17.2	17.7
06	1.47	6.1	7.5	8.7	9.7	10.6	11.5	12.3	13.0	13.7	14.4	15.0	15.6	16.2	16.8	17.3	17.9	18.4	18.9	19.4
065	1.52	6.6	8.1	9.4	10.5	11.5	12.4	13.2	14.0	14.8	15.5	16.2	16.9	17.5	18.1	18.7	19.3	19.9	20.4	20.9
07	1.60	7.2	8.8	10.1	11.3	12.4	13.4	14.3	15.2	16.0	16.8	17.5	18.2	18.9	19.6	20.2	20.9	21.5	22.1	22.6
075	1.65	7.6	9.4	10.8	12.1	13.2	14.3	15.3	16.2	17.1	17.9	18.7	19.5	20.2	20.9	21.6	22.3	22.9	23.6	24.2
08	1.70	8.1	10.0	11.5	12.9	14.1	15.2	16.3	17.3	18.2	19.1	19.9	20.8	21.5	22.3	23.0	23.7	24.4	25.1	25.7
085	1.75	8.7	10.6	12.3	13.7	15.0	16.2	17.4	18.4	19.4	20.3	21.3	22.1	23.0	23.8	24.5	25.3	26.0	26.7	27.4
09	1.80	9.4	11.5	13.3	14.8	16.3	17.6	18.8	19.9	21.0	22.0	23.0	23.9	24.8	25.7	26.6	27.4	28.2	28.9	29.7
095	1.85	9.8	12.0	13.9	15.6	17.0	18.4	19.7	20.9	22.0	23.1	24.1	25.1	26.0	26.9	27.8	28.7	29.5	30.3	31.1
10	1.90	10.3	12.6	14.5	16.3	17.8	19.2	20.6	21.8	23.0	24.1	25.2	26.2	27.2	28.2	29.1	30.0	30.9	31.7	32.5
105	1.94	10.7	13.2	16.6	18.2	18.6	19.9	20.1	22.8	23.5	25.2	25.7	27.4	28.4	28.8	30.4	30.6	32.2	33.1	33.2
11	1.98	11.2	13.7	15.8	17.7	19.4	20.9	22.4	23.7	25.0	26.2	27.4	28.5	29.6	30.6	31.6	32.6	33.5	34.5	35.4
115	2.03	11.6	14.2	16.4	18.4	20.1	21.8	23.3	24.7	26.0	27.3	28.5	29.6	30.8	31.8	32.9	33.9	34.9	35.8	36.8
12	2.08	12.1	14.8	17.1	19.1	20.9	22.6	24.1	25.6	27.0	28.3	29.6	30.8	31.9	33.1	34.2	35.2	36.2	37.2	38.2
125	2.13	12.5	15.3	17.7	19.8	21.7	23.4	25.0	26.6	28.0	29.4	30.7	31.9	33.1	34.3	35.4	36.5	37.6	38.6	39.6
13	2.16	13.4	16.4	19.0	21.2	23.2	25.1	26.8	28.5	30.0	31.5	32.9	34.2	35.5	36.7	37.9	39.1	40.2	41.4	42.4
14	2.26	14.3	17.5	20.2	22.6	24.8	26.8	28.6	30.4	32.0	33.6	35.1	36.5	37.9	39.2	40.5	41.7	42.9	44.1	45.3
15	2.34	15.2	18.6	21.5	24.0	26.3	28.4	30.4	32.3	34.0	35.7	37.2	38.8	40.2	41.6	43.0	44.3	45.6	46.9	48.1
16	2.41	16.1	19.7	22.8	25.5	27.9	30.1	32.2	34.2	36.0	37.8	39.4	41.0	42.6	44.1	45.5	46.9	48.3	49.6	50.9
18	2.54	18.3	22.5	25.9	29.0	31.8	34.3	36.7	38.9	41.0	43.0	44.9	46.7	48.5	50.2	51.9	53.5	55.0	56.5	58.0
20	2.69	20.6	25.2	29.1	32.5	35.6	38.5	41.1	43.6	46.0	48.2	50.4	52.4	54.4	56.3	58.2	60.0	61.7	63.4	65.1
25	3.00	25.5	31.2	36.0	40.3	44.2	47.7	51.0	54.1	57.0	59.8	62.4	65.0	67.4	69.8	72.1	74.3	76.5	78.6	80.6
30	3.30	30.4	37.2	43.0	48.1	52.7	56.9	60.8	64.5	68.0	71.3	74.5	77.5	80.5	83.3	86.0	88.7	91.2	93.7	96.2
40	3.80	40.7	49.8	57.6	64.3	70.5	76.1	81.4	86.3	91.0	95.4	99.7	103.8	107.7	111.5	115.1	118.6	122.1	125.4	128.7
50	4.20	51.0	62.4	72.1	80.6	88.3	95.4	102.0	108.1	114.0	119.6	124.9	130.0	134.9	139.6	144.2	148.6	152.9	157.1	161.2
60	4.70	61.3	75.0	86.6	96.9	106.1	114.6	122.5	130.0	137.0	143.7	150.1	156.2	162.1	167.8	173.3	178.6	183.8	188.8	193.7
70	5.10	71.6	87.6	101.2	113.1	123.9	133.9	143.1	151.8	160.0	167.8	175.3	182.4	189.3	196.0	202.4	208.6	214.7	220.5	226.3
80	5.50	81.4	99.7	115.1	128.7	141.0	152.3	162.8	172.7	182.0	190.9	199.4	207.5	215.3	222.9	230.2	237.3	244.2	250.9	257.4
90	5.90	91.7	112.3	129.7	145.0	158.8	171.5	183.4	194.5	205.0	215.0	224.6	233.7	242.6	251.1	259.3	267.3	275	282.6	289.9

FUSSEN®

Nozzle Chart (210 - 1250 bar)

Nozzle Size		Pressure																		
	Bar	210	220	230	240	250	280	300	350	400	450	500	550	600	700	800	900	1000	1100	1250
	PSI	3045	3190	3335	3480	3625	4060	4350	5075	5800	6525	7250	7975	8700	10150	11600	13050	14500	15955	18130
	Ø mm	Flow Rate (L/min)																		
015	0.80	4.9	5.0	5.2	5.3	5.4	5.7	5.9	6.4	6.8	7.2	7.6	8.0	8.3	8.9	9.5	10.1	10.6	11.1	11.9
02	0.91	6.7	6.8	7.0	7.1	7.3	7.7	8.0	8.6	9.2	9.8	10.3	10.8	11.3	11.8	12.6	13.4	14.1	14.8	15.8
025	1.00	8.1	8.3	8.5	8.7	8.9	9.4	9.7	10.5	11.2	11.9	12.5	13.1	13.7	14.8	15.8	16.8	17.7	18.5	19.8
03	1.09	9.9	10.1	10.3	10.5	10.8	11.4	11.8	12.7	13.6	14.4	15.2	15.9	16.7	17.7	19.0	20.1	21.2	22.2	23.7
035	1.15	11.6	11.9	12.1	12.4	12.6	13.4	13.9	15.0	16.0	17.0	17.9	18.8	19.6	20.7	22.1	23.5	24.7	26.0	27.7
04	1.19	13.2	13.5	13.8	14.1	14.4	15.2	15.8	17.0	18.2	19.3	20.3	21.3	22.3	23.7	25.3	26.8	28.3	29.7	31.6
045	1.27	14.9	15.3	15.6	16.0	16.3	17.2	17.8	19.3	20.6	21.8	23.0	24.2	25.2	26.6	28.5	30.2	31.8	33.4	35.6
05	1.35	16.5	16.9	17.3	17.7	18.0	19.1	19.7	21.3	22.8	24.2	25.5	26.7	27.9	29.6	31.6	33.5	35.4	37.1	39.5
055	1.40	18.1	18.5	19.0	19.4	19.8	20.9	21.7	23.4	25.0	26.5	28.0	29.3	30.6	32.5	34.8	36.9	38.9	40.8	43.5
06	1.47	19.9	20.3	20.8	21.2	21.7	22.9	23.7	25.6	27.4	29.1	30.6	32.1	33.6	35.5	37.9	40.2	42.4	44.5	47.4
065	1.52	21.4	22.0	22.4	22.9	23.4	24.8	25.6	27.7	29.6	31.4	33.1	34.7	36.3	38.5	41.1	43.6	46.0	48.2	51.4
07	1.60	23.2	23.7	24.3	24.8	25.3	26.8	27.7	29.9	32.0	33.9	35.8	37.5	39.2	41.4	44.3	47.0	49.5	51.9	55.3
075	1.65	24.8	25.4	25.9	26.5	27.0	28.6	29.6	32.0	34.2	36.3	38.2	40.1	41.9	44.4	47.4	50.3	53.0	55.6	59.3
08	1.70	26.4	27.0	27.6	28.2	28.8	30.5	31.5	34.0	36.4	38.6	40.7	42.7	44.6	47.3	50.6	53.7	56.6	59.3	63.2
085	1.75	28.1	28.8	29.4	30.1	30.7	32.5	33.6	36.3	38.8	41.2	43.4	45.5	47.5	50.3	53.8	57.0	60.1	63.0	67.2
09	1.80	30.4	31.1	31.8	32.5	33.2	35.1	36.4	39.3	42.0	44.5	47.0	49.2	51.4	53.2	56.9	60.4	63.6	66.7	71.2
095	1.85	31.9	32.6	33.4	34.1	34.8	36.8	38.1	41.2	44.0	46.7	49.2	51.6	53.9	56.2	60.1	63.7	67.2	70.5	75.1
10	1.90	33.3	34.1	34.9	35.6	36.4	38.5	39.8	43.0	46.0	48.8	51.4	53.9	56.3	59.2	63.2	67.1	70.7	74.2	79.1
105	1.94	34.8	34.8	36.4	37.2	37.1	39.3	40.7	43.9	47.0	51.0	52.5	56.3	57.5	62.1	66.4	70.4	74.2	79.7	84.9
11	1.98	36.2	37.1	37.9	38.7	39.5	41.8	43.3	46.8	50.0	53.0	55.9	58.6	61.2	65.1	69.6	73.8	77.8	81.6	87.0
115	2.03	37.7	38.6	39.4	40.3	41.1	43.5	45.0	48.6	52.0	55.2	58.1	61.0	63.7	68.0	72.7	77.1	81.3	85.3	90.9
12	2.08	39.1	40.0	40.9	41.8	42.7	45.2	46.8	50.5	54.0	57.3	60.4	63.3	66.1	71.0	75.9	80.5	84.9	89.0	94.9
125	2.13	40.6	41.5	42.5	43.4	44.3	46.9	48.5	52.4	56.0	59.4	62.6	65.7	68.6	74.0	79.1	83.9	88.4	92.7	98.8
13	2.16	43.5	44.5	45.5	46.5	47.4	50.2	52	56.1	60.0	63.6	67.1	70.4	73.5	76.9	82.2	87.2	91.9	96.4	102.8
14	2.26	46.4	47.5	48.5	49.6	50.6	53.5	55.4	59.9	64.0	67.9	71.6	75.0	78.4	82.8	88.5	93.9	99.0	103.8	110.7
15	2.34	49.3	50.4	51.6	52.7	53.8	56.9	58.9	63.6	68.0	72.1	76.0	79.7	83.3	88.7	94.9	100.6	106.1	111.2	118.6
16	2.41	52.2	53.4	54.6	55.8	56.9	60.2	62.4	67.3	72.0	76.4	80.5	84.4	88.2	94.7	101.2	107.3	113.1	118.7	126.5
18	2.54	59.4	60.8	62.2	63.5	64.8	68.6	71.0	76.7	82.0	87.0	91.7	96.2	100.4	106.5	113.8	120.7	127.3	133.5	142.3
20	2.69	66.7	68.2	69.8	71.3	72.7	77.0	79.7	86.1	92.0	97.6	102.9	107.9	112.7	118.3	126.5	134.2	141.4	148.3	158.1
25	3.00	82.6	84.5	86.4	88.3	90.1	95.4	98.7	106.6	114.0	120.9	127.5	133.7	139.6	147.9	158.1	167.7	176.8	185.4	197.6
30	3.30	98.5	100.9	103.1	105.3	107.5	113.8	117.8	137.2	136.0	144.2	152.1	159.5	166.6	177.5	189.7	201.2	212.1	222.5	237.2
40	3.80	131.9	135.0	138.0	141.0	143.9	152.3	157.6	170.2	182.0	193.0	203.5	213.4	222.9	236.6	253.0	268.3	282.8	296.6	316.2
50	4.20	165.2	169.1	172.9	176.6	180.2	190.8	197.5	213.3	228.0	241.8	254.9	267.4	279.2	295.8	316.2	335.4	353.6	370.8	395.3
60	4.70	198.5	203.2	207.8	212.2	216.6	229.2	237.3	256.3	274.0	290.6	306.3	321.3	335.6	355.0	379.5	402.5	424.3	445.0	474.3
70	5.10	231.9	237.3	242.7	247.9	253.0	267.7	277.1	299.3	320.0	339.4	357.8	375.2	391.9	423.2	452.4	479.9	505.8	530.5	565.5
80	5.50	263.7	269.9	276.0	282.0	287.8	304.5	315.2	340.5	364.0	386.1	407.0	426.8	445.8	481.2	514.4	545.6	575.1	603.2	643.0
90	5.90	297.1	304.1	310.9	317.6	324.1	343.0	355.1	383.5	410.0	434.9	458.4	480.8	502.1	542.3	579.7	614.9	648.2	679.8	724.7